YZ-4 SETTING SHEET Ver.01

DRIVER _____ DATE / /

CIRCUIT

○ INDOOR ○ OUTDOOR
○ WET ○ DRY ○ DUSTY ○ OTHER
○ LOW TRACTION ○ MED TRACTION ○ HIGH TRACTION
○ SMOOTH ○ BUMPY ○ BIUE GROOVE ○ ASTROTURF
○ CARPET ○ WOOD

FRONT

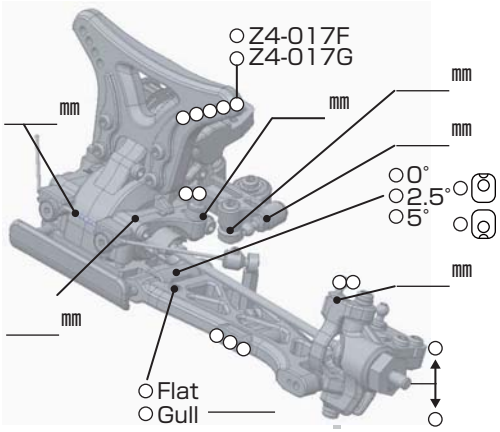

◆CAMBER ○←→○ _____ °

◆TOE ○IN ○OUT _____ °

◆RIDE HEIGHT _____ mm

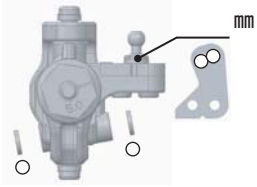

○10°
○12.5°
○15°
○Z4-201CL
○Z2-201BA

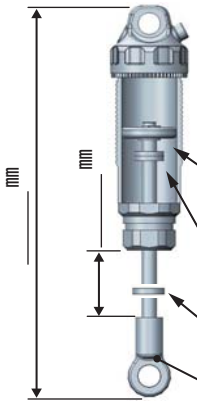

SPRING
○ GREEN (YS-A775)
○ _____

OIL
_____
○ #1 ○ #2 ○ #3
○ _____
○ ○
○ ○
_____ mm x
_____ mm x
○SD-008RC

REAR

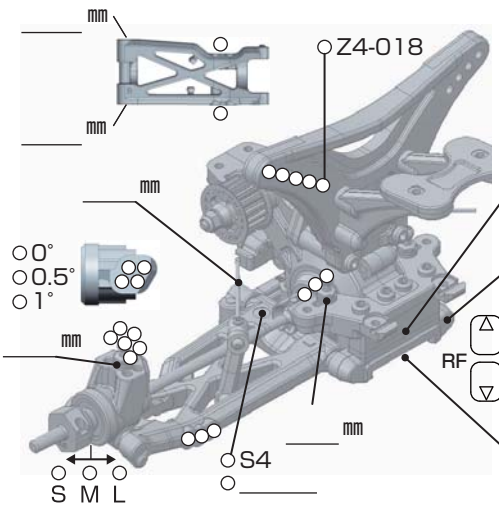

◆CAMBER ○←→○ _____ °

◆RIDE HEIGHT _____ mm

○ BLACK ×_____
○ BROWN ×_____

○S▲/S-T3-S2
○Z2-300RF/Z4-300SRR

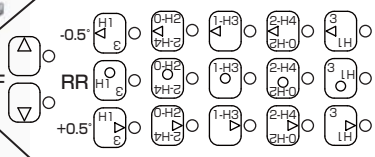

○ BLACK ×_____
○ BROWN ×_____

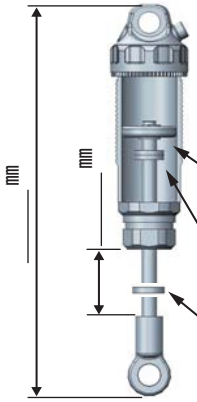

SPRING
○ GREEN (YS-A1200)
○ _____

OIL
_____
○ #1 ○ #2 ○ #3
○ _____
○ ○
○ ○
_____ mm x
_____ mm x

DRIVE

F/# _____
R/# _____

MOTOR ➪ _____ ○Bonded ○Sintered _____ mm
GEAR ➪ Spur T ／ Pinion T : 2.6
BATTERY ➪ _____
ESC ○ Racing Performer X Series
○ _____

Battery placement

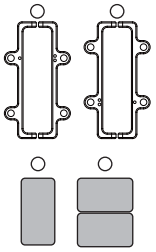

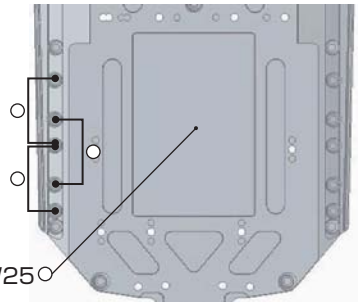

TIRE

FRONT		REAR	
TIRE ➪	_____	TIRE ➪	_____
INSERTS ➪	_____	INSERTS ➪	_____
WHEELS ➪	_____	WHEELS ➪	_____

OTHER

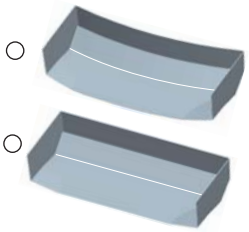

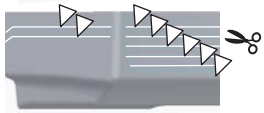

○ _____

COMMENT