YZ-4 SETTING SHEET Ver.01

DRIVER	Kaito Kodera	DATE	2015/11/22

CIRCUIT EOS Rd2 HUDY ARENA

● INDOOR ○ OUTDOOR
○ WET ○ DRY ○ DUSTY ○ OTHER
○ LOW TRACTION ○ MED TRACTION ● HIGH TRACTION
● SMOOTH ○ BUMPY ○ BIUE GROOVE ○ ASTROTURF
● CARPET ○ WOOD ○ CLAY

FRONT

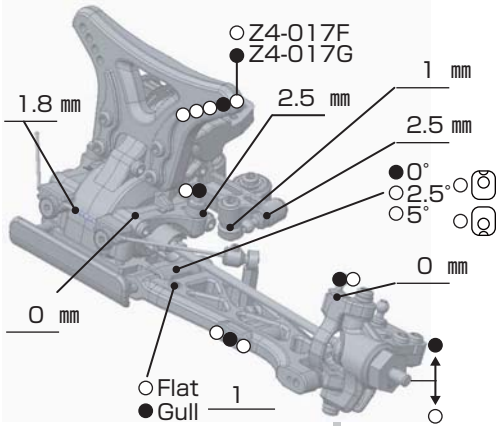

◆CAMBER ●←→○ 2.5 °

◆TOE ○IN ○OUT 0.5 °

◆RIDE HEIGHT 17 ㎜

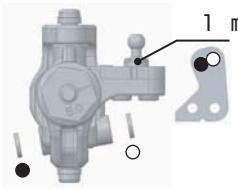

○10°
●12.5°
○15°

●Z4-201CL
●Z2-201BA

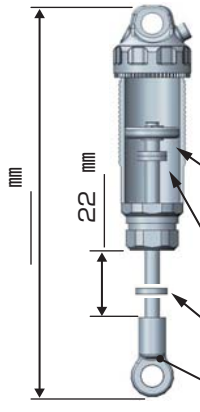

SPRING
○ GREEN (YS-A775)
● ORANGE (YAS-650)

OIL
35(AE)
○ #1 ○ #2 ○ #3
● 1.6㎜×2(BM-S162)
● ○
○
㎜ x
㎜ x
●SD-008RC

REAR

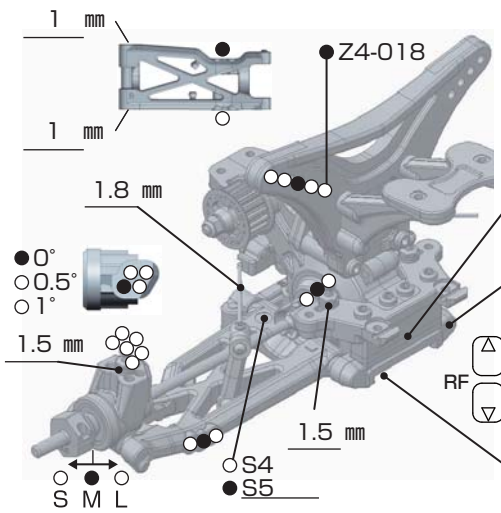

◆CAMBER ●←→○ 4 °

◆RIDE HEIGHT 17 ㎜

● BLACK × 1
BROWN ×

○ BLACK × 2
● BROWN × 1

○S▲/S-T3-S2
●Z2-300RF/Z4-300SRR

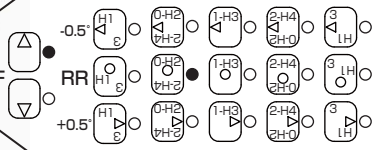

● BLACK × 1
BROWN ×

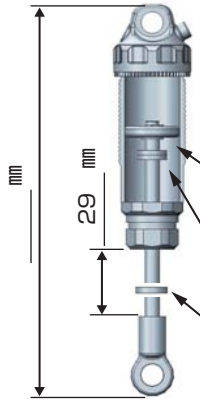

SPRING
○ GREEN (YS-A1200)
● GREEN (YAS-1050)

OIL
32.5(AE)
○ #1 ○ #2 ○ #3
● 1.7㎜×2(BM-S172)
● ○
○
㎜ x
㎜ x

DRIVE

F/# 20K
R/# 10K

MOTOR	➪ YOKOKMO RP 5.0T	○Bonded ○Sintered ㎜
GEAR	➪ Spur 87T ／ Pinion 20T : 2.6	
BATTERY	➪ YOKOKMO RP 4800	
ESC	● Racing Performer X Series	
	○	

Battery placement

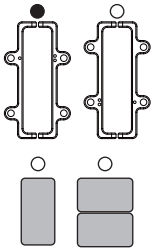

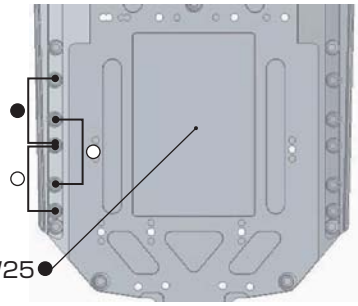

TIRE

FRONT		REAR	
TIRE	➪ Wide Stgger	TIRE	➪ Mini Pin
INSERTS	➪	INSERTS	➪
WHEELS	➪	WHEELS	➪

OTHER

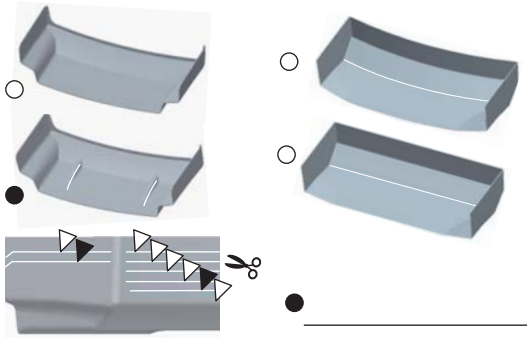

○
●
○
○
●

COMMENT

Option parts

Z4-010FL	Z4-101LW	Z4-412	Z4-203A
Z4-TBS	Z4-TSS	Z4-413125	Z2-415R00
Z4-644H	Z2-670VP	Z2-300RF	B4-300B
Z4-300SRR	Z4-300RFS	Z4-300RRS	Z4-304C
Z4-304LC	Z4-309C	Z2-S2SD	Z2-S2LD
YS-8BH			