YZ-2 DTM3 CAL3 SETTING SHEET Ver.01

DRIVER **Ryan Maifield** | DATE **17/Nov/2019**

CIRCUIT **YATABE ARENA(RCM Off-road champ)**

○INDOOR ○OUTDOOR
○DIRT ○ASTROTURF ●CARPET ○GLASS ○WOOD
○WET ○DRY ○DUSTY ●SMOOTH ○BUMPY
○HARD PACKED ○CLAY ○BIUE GROOVE ○ ____
○LOW TRACTION ○MED TRACTION ●HIGH TRACTION

FRONT

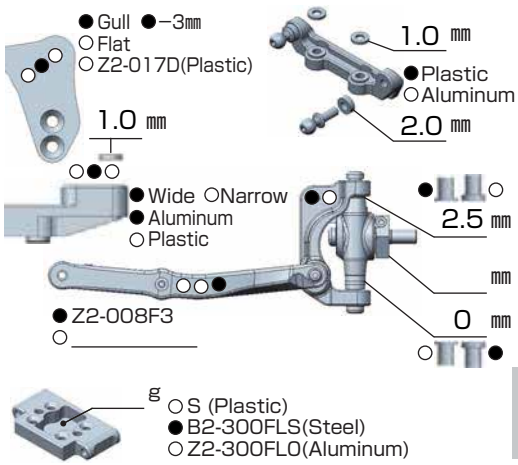

◆CAMBER ●←→○ 2.0 °

◆TOE ○IN ●OUT 0 °

◆RIDE HEIGHT 13 ㎜

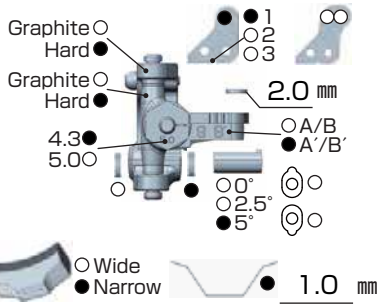

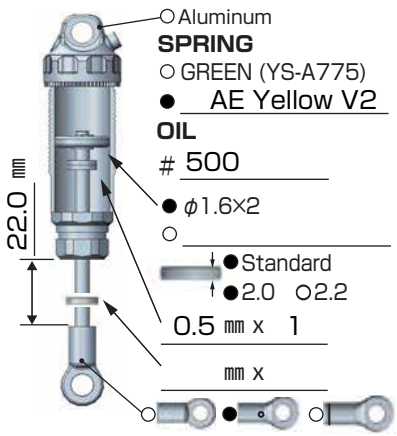

REAR

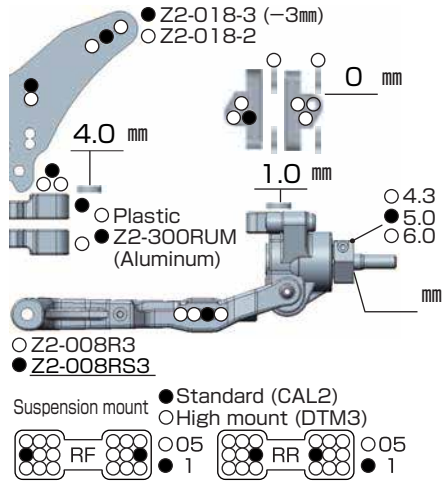

◆CAMBER ●←→○ 1.0 °

◆RIDE HEIGHT 13 ㎜

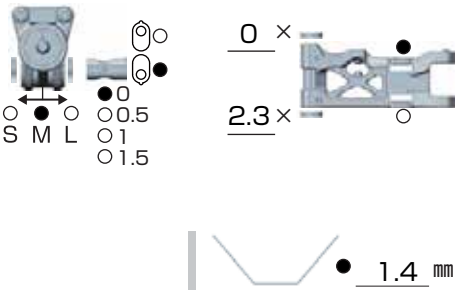

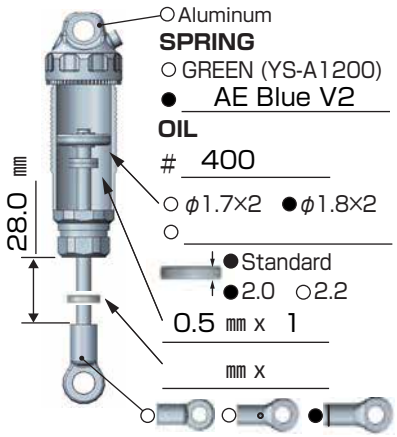

DRIVE

MOTOR	⇨	ORION 5.5T Rotor 12.5 ㎜
GEAR	⇨	Spur 80 T ／ Pinion 22 T : 2.6
BATTERY	⇨	ORION 4000 HV Shorty
ESC	○	YOKOMO RPXⅡ ●YOKOMO BL-PRO4
	○	ORION HMX

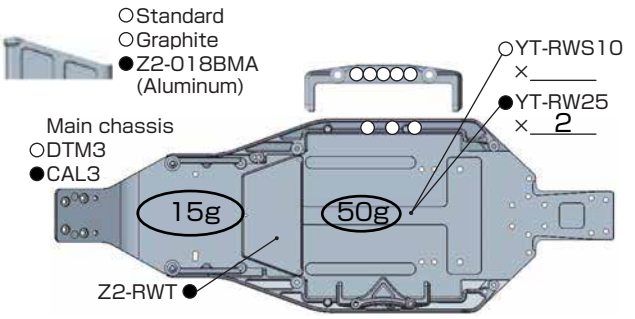

TIRE

FRONT			REAR		
TIRE	⇨	Schumacher Cut Stagger(Handout)	TIRE	⇨	Schumacher Cactus (Handout)
INSERTS	⇨	None	INSERTS	⇨	Standard
WHEELS	⇨	J Concepts	WHEELS	⇨	J Concepts

OTHER

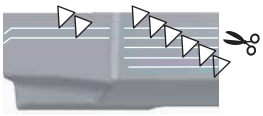

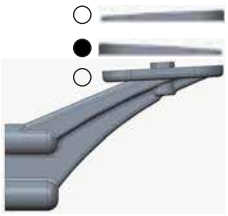

○Z2-DTM2W (Aero S-Type)
○Z2-CAL2W (LMR27)
● JC High clearance

COMMENT

Race Rasult = TQ & WIN