MO 3.0 SETTING SHEET Ver.01

DRIVER

DATE

CIRCUIT

☐INDOOR ☐OUTDOOR
☐DIRT ☐ASTROTURF ☐CARPET ☐GLASS ☐WOOD
☐WET ☐DRY ☐DUSTY ☐SMOOTH ☐BUMPY
☐HARD PACKED ☐CLAY ☐BIUE GROOVE ☐ _____
☐LOW TRACTION ☐MED TRACTION ☐HIGH TRACTION

FRONT

◆CAMBER ○←→○ _____°

◆TOE ○IN ○OUT _____°

◆RIDE HEIGHT _____mm

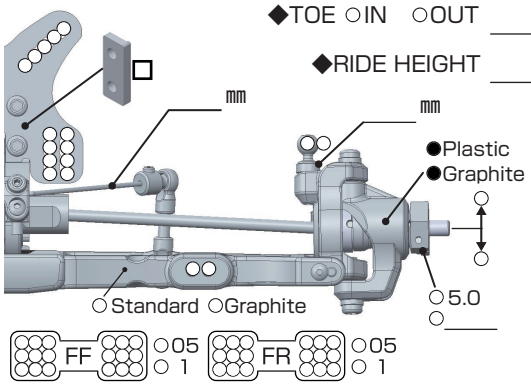

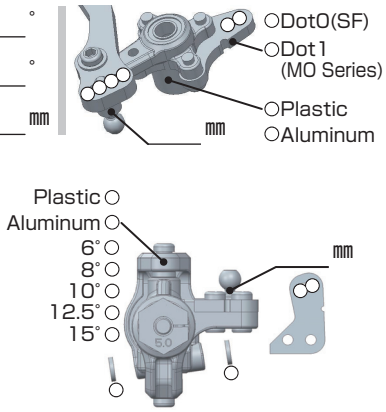

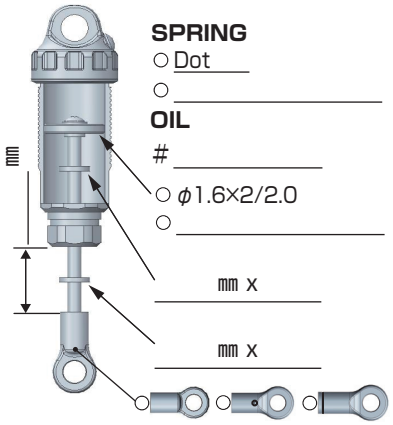

SPRING
○ Dot ____
○ _____

OIL
_____
○ φ1.6×2/2.0
○ _____

mm x _____

mm x _____

REAR

◆CAMBER ○←→○ _____°

◆RIDE HEIGHT _____mm

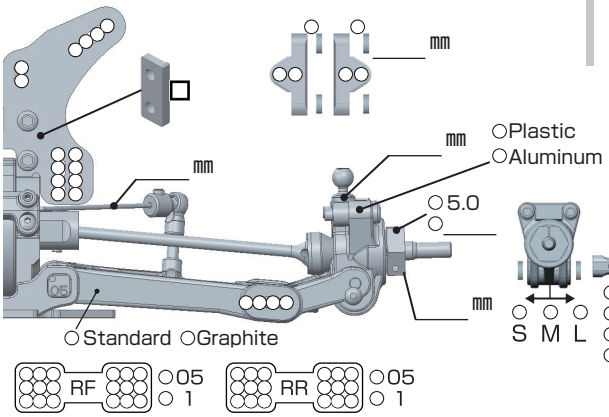

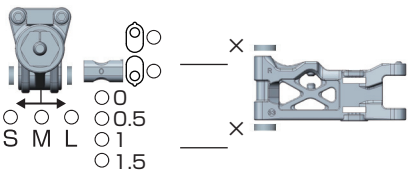

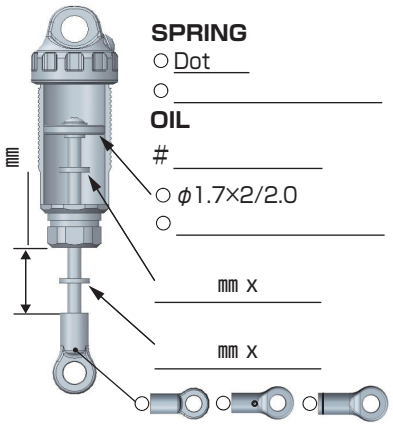

SPRING
○ Dot ____
○ _____

OIL
_____
○ φ1.7×2/2.0
○ _____

mm x _____

mm x _____

DRIVE

F/# _____
○2 ○4 gear

R/# _____
○2 ○4 gear

○F2 ○R2
○F1 ○R1
○F0 ○R-0.5

CENTER POSITION ○Forward ○Back

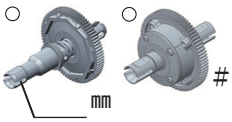

_____

MOTOR ➪ _____ Rotor _____mm

GEAR ➪ Spur T ／ Pinion T : 2.5

BATTERY ➪ _____

ESC ○ YOKOMO RPX ○YOKOMO BL-PRO4

○ _____

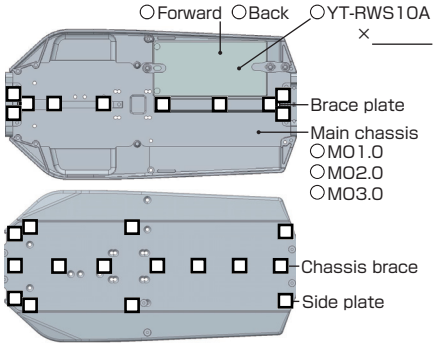

TIRE

FRONT

TIRE ➪ _____

INSERTS ➪ _____

WHEELS ➪ _____

REAR

TIRE ➪ _____

INSERTS ➪ _____

WHEELS ➪ _____

OTHER

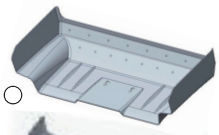

○

○

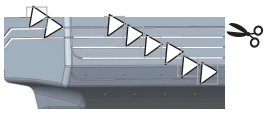

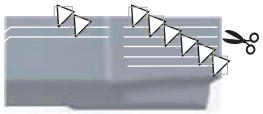

○ Z2-DTM31WA (Aero Hi-clearance 7')
○ Z2-CAL2WA (LMR27)
○ _____

○ _____

○ _____

COMMENT